DIMNS MARKED DENOTES (S) SAFETY/REGULATION (F) CRITICAL FIT/FUNCTION (M) MAJOR FIT/FUNCTION (M2) MINOR FIT/FUNCTION

Ø 'C'	PLATING THICKNESS (AFTER POST CHROME GRINDING)	PLATING THICKNESS (BEFORE POST CHROME GRINDING)	FINISH GRINDIG Ø	MODEL
Ø10.960~10.986	15 ±4μm (F)	18 ±4μm	Ø10.938~10.948	KOLA

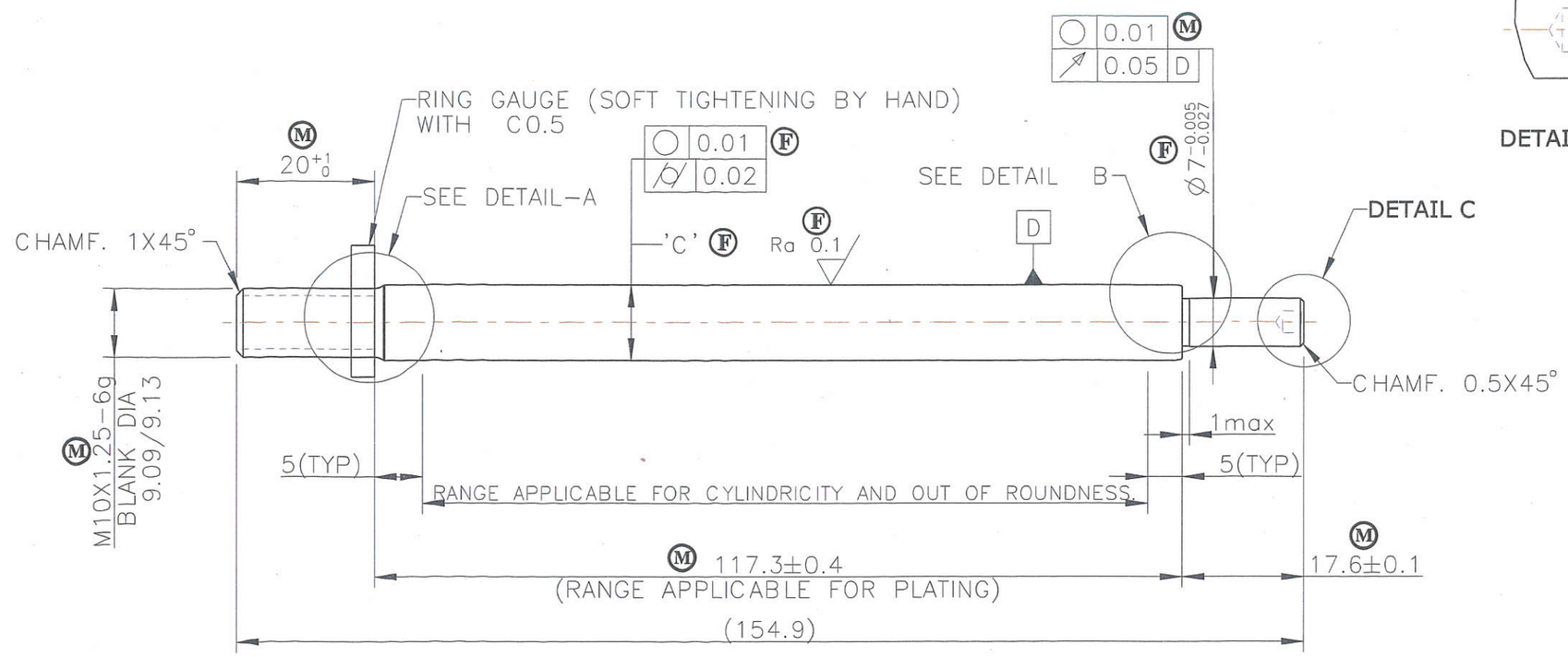

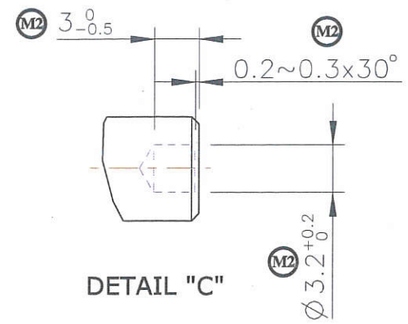

DETAIL "C"

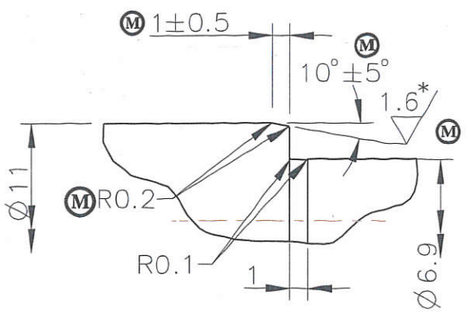

(PROFILE AT FINISH GRINDING)
DETAIL "B"

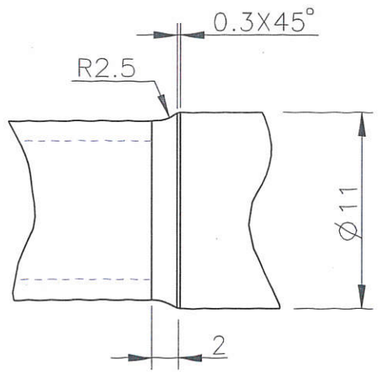

(PROFILE AT MACHINING STAGE)

DETAIL "A"

NOTE:

1. TO BE GROUND TO FINISH SIZE AFTER PLATING. MATERIAL REMOVAL 3~5μ ON DIAMETER.
2. (M) PLATING QUALITY SHALL BE AS PER HESD2011(EXCEPT PLATING THICKNESS)
3. (M) CHROME HARDNESS : HV 800MIN. / 50gms LOAD.
4. (M) MUST BE NO CHATTER, SCRATCH,ABRASION AND BRUSIE ON SURFACE OF Ø11
5. MUST BE NO PIN HOLE, ROUGH SURFACE AND BLISTER AFTER PLATING
6. DIMENSIONS WITHIN () ARE ONLY FOR REFERENCE &NOT FOR INSPECTION
7. * MARKED DIMENSION IS FOR VISUAL INSPECTION

DATE	REV	ALTERATION	E.C.N.NO
12.08.19	00	RELEASED FOR MASS PRODUCTION	715-05
05.07.19	A3	DIM 117.3 WAS 117	715-03
05.10.18	A2	RELEASED FOR OTS	715-01
23.08.18	A1	RELEASED FOR PROTO	

SUPERSEDES :

GENERAL TOLERANCE ASPER : -

DESIGN SOURCE REF.

RELEASE FOR
☐ COSTING ☐ PROTOTYPE ☐ OTS ☐ PRE-PRODUCTION ■ PRODUCTION

GABRIEL INDIA LTD.

SCALE	SHEETS	FINISH:	MASS:
1:1	1 / 1	HARD CHROME PLATING (MFiCr1)	104 g

DRAWN BY KAILAS DATE: 12.08.19

CHECKED BY BALAJI DATE: 12.08.19

APPROVED BY DIWAKAR DATE: 12.08.19

NAME:- PISTON ROD

MATERIAL:- BAR-3404010-AS.PER-GP136-5 SAE1035 (S)

PART NO:- 34040205 REV. 00

ALL DIMENSIONS ARE IN MM. | NO MANUAL ALTERATION | DO NOT SCALE | IF IN DOUBT PLEASE ASK | SIZE : A3

CONFIDENTIAL: THIS DRAWING AND THE INFORMATION THEREIN ARE THE PROPERTY OF GABRIEL INDIA LTD., AND SHALL NOT BE REPRODUCED, COPIED RECORDED IN ANY MEDIA, USED FOR ANY OTHER PURPOSE OR DELIVERED AND/OR DISCLOSED TO ANY THIRD PARTY WITHOUT WRITTEN CONSENT OF GABRIEL.